Japan Display Inc.

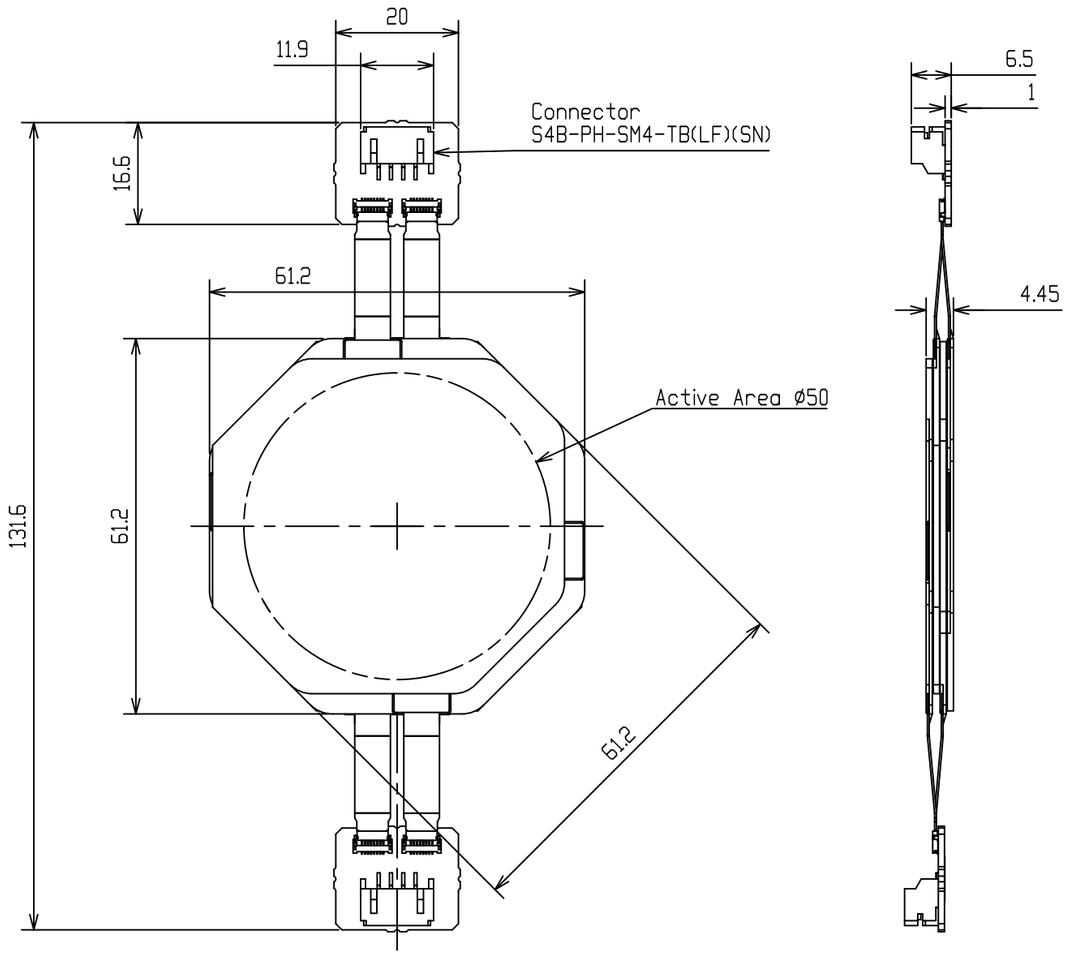


| | |
|---|---|
| UNIT | mm |
| PROJECTION | |
| SCALE | 1:1 |
| LumiFree Ø50 Outline | 1/1 |

THIS DOCUMENT IS PROPRIETARY , AND THE PROPERTY OF JDI. ITS USE IS AUTHORIZED ONLY FOR VERIFICATION OF PRODUCT DESIGNS. THE REPRODUCTION, DISTRIBUTION AND UTILIZATION OF THIS DOCUMENT AS WELL AS THE COMMUNICATION OF ITS CONTENTS TO OTHERS WITHOUT EXPRESS AUTHORIZATION ARE PROHIBITED. OFFENDERS WILL BE HELD LIABLE FOR THE PAYMENT OF DAMAGES. ALL RIGHTS RESERVED IN THE EVENT OF THE GRANT OF A PATENT, UTILITY MODEL OR DESIGN.
COPYRIGHT RESERVED.

ISSUED 2025/03/17

A3
'15.10